ESP	MACHINE CODE	MACHINE CODE	MACHINE CODE	MACHINE CODE	MACHINE CODE
2	11481				
DESC.	F1B 80-16				
BODY	138578				
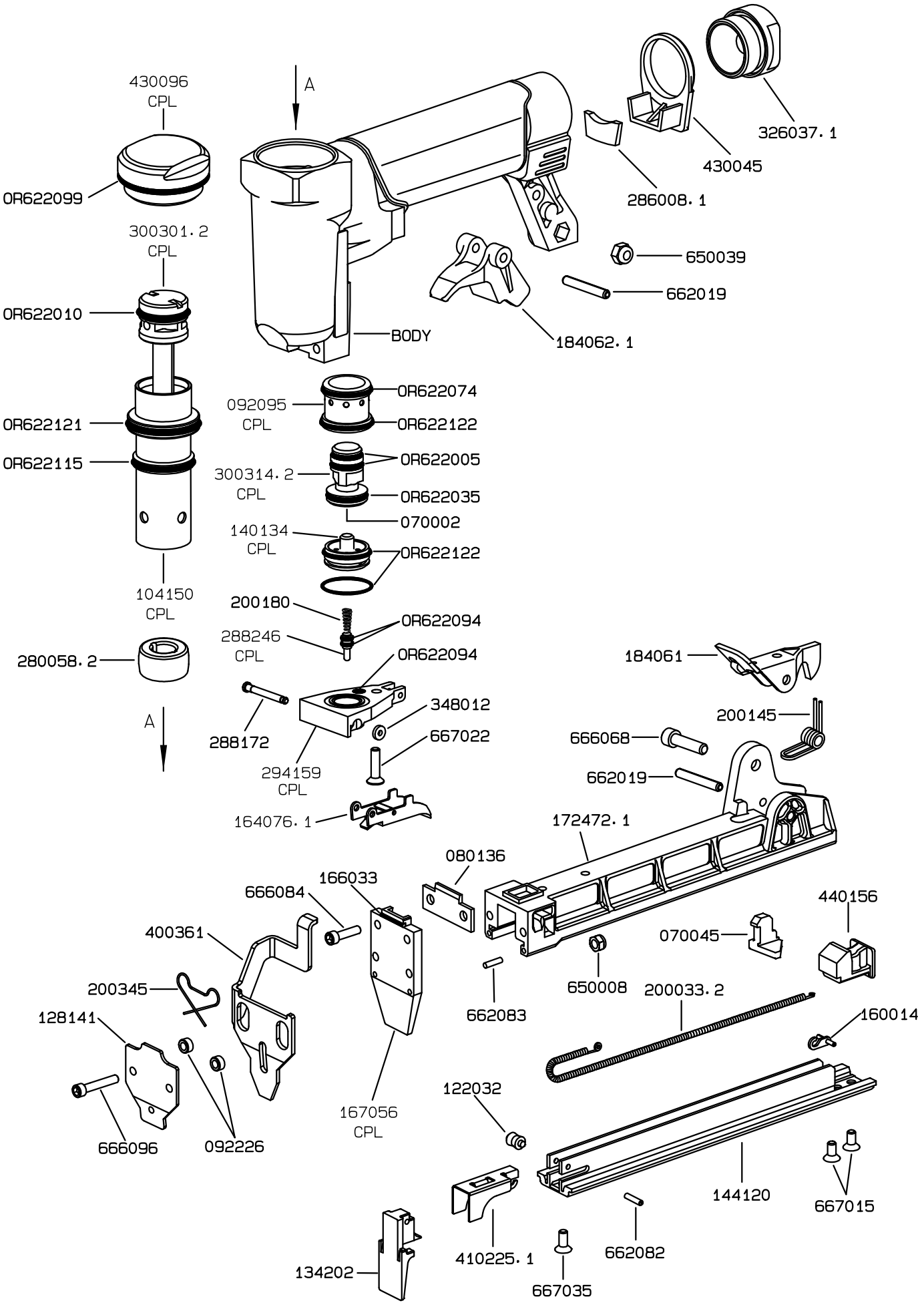
SAFETY C.T.