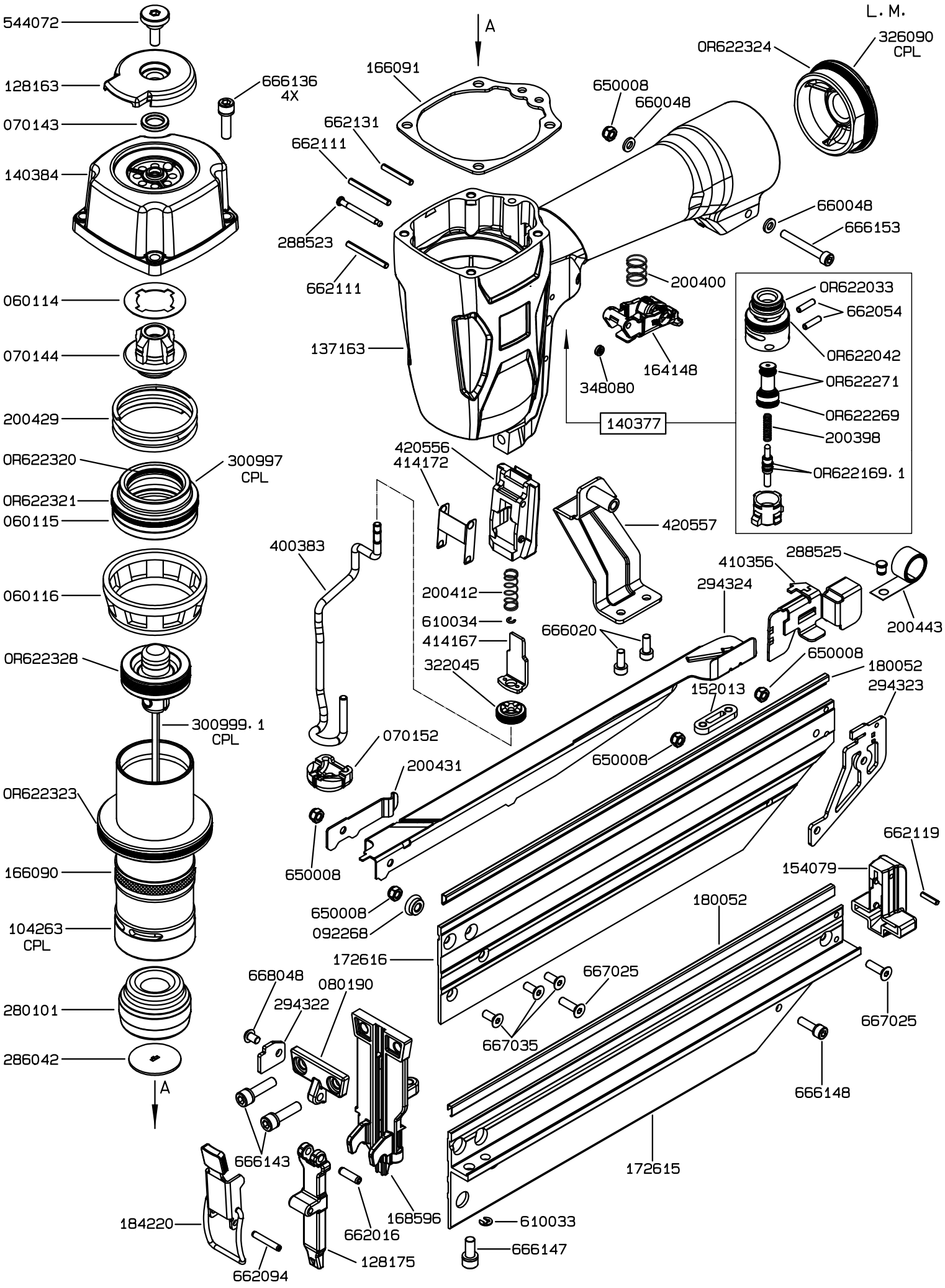ESP	MACHINE CODE	MACHINE CODE	MACHINE CODE	MACHINE CODE
0	11719			
DESC.	F30AT FN-65